CIRCULAR

MODEL H

LedsC4

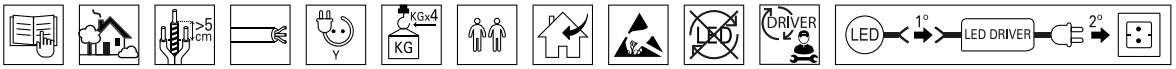

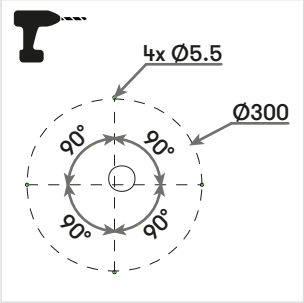

1

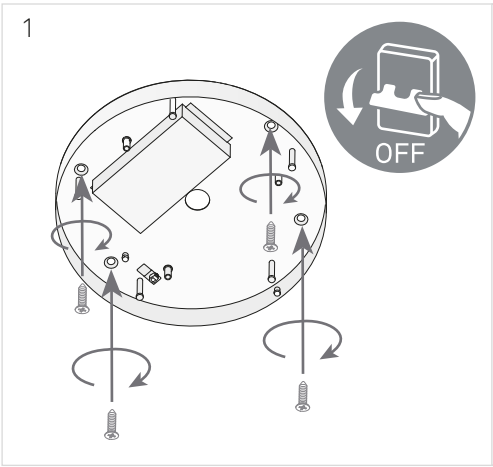

2

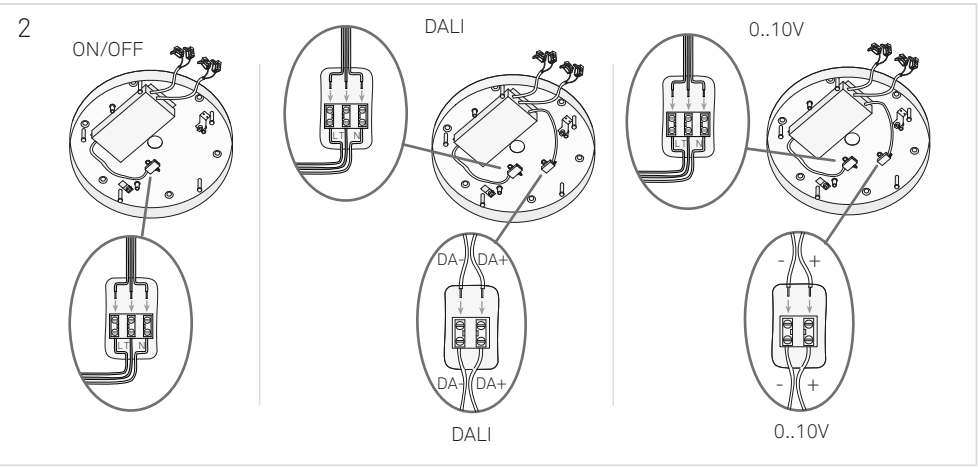

3

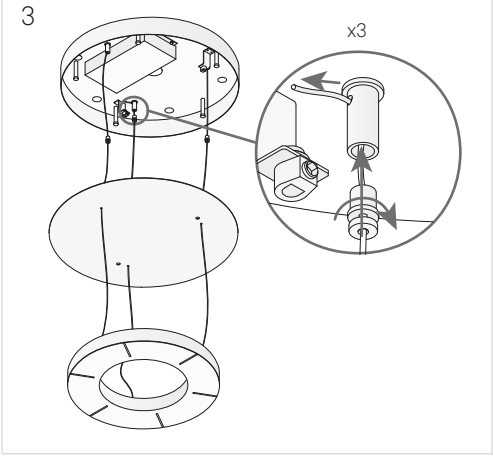

4

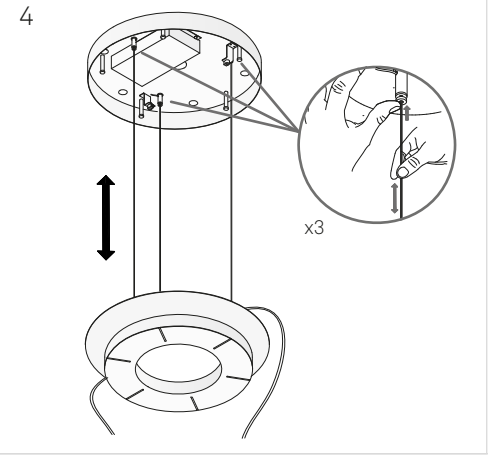

5

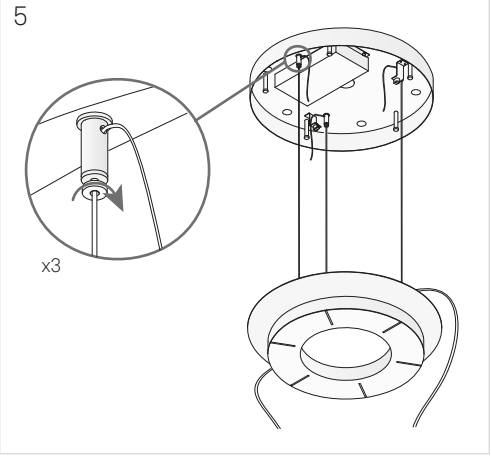

6

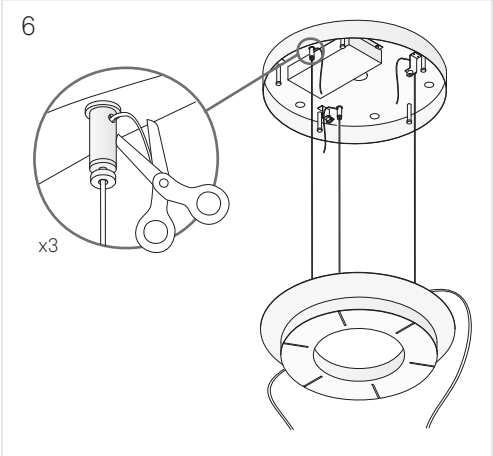

7

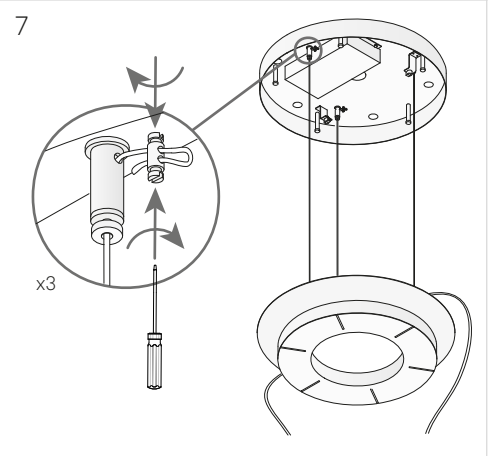

8

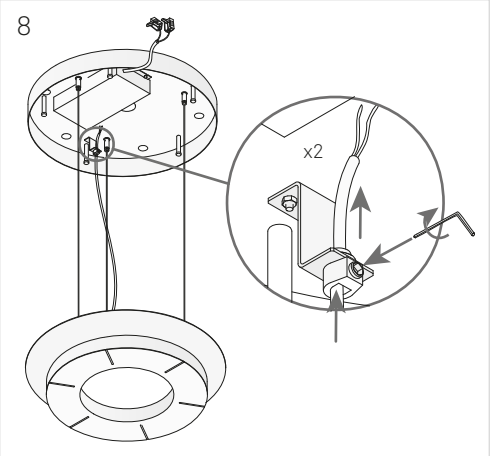

9

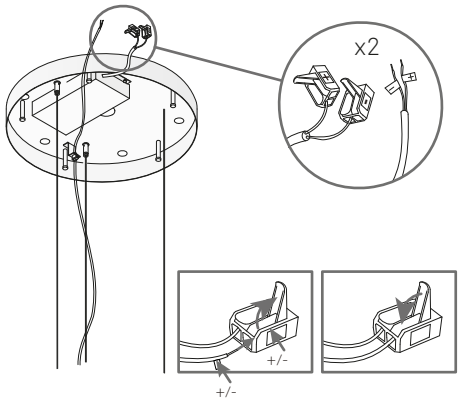

10

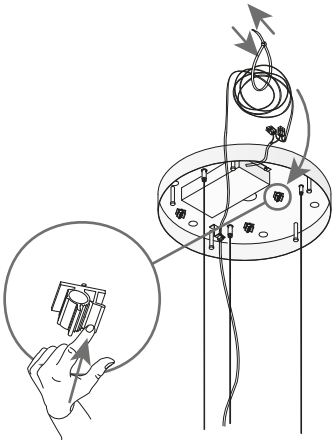

11

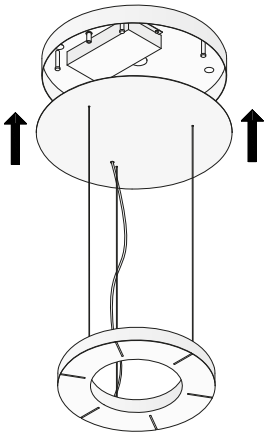

12

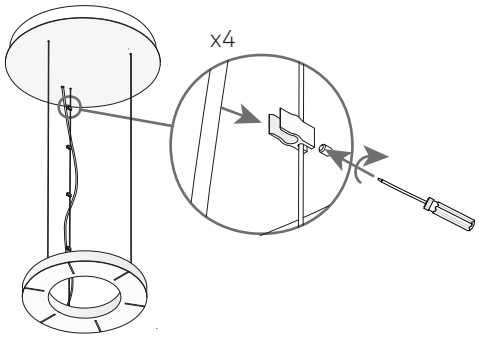

13

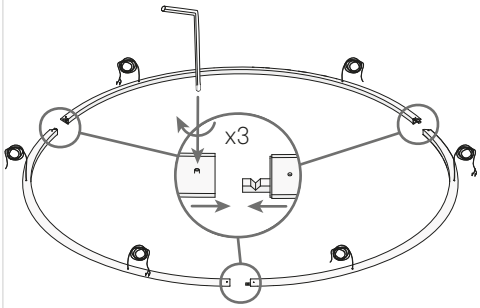

14

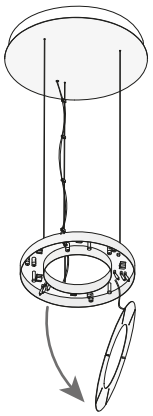

15

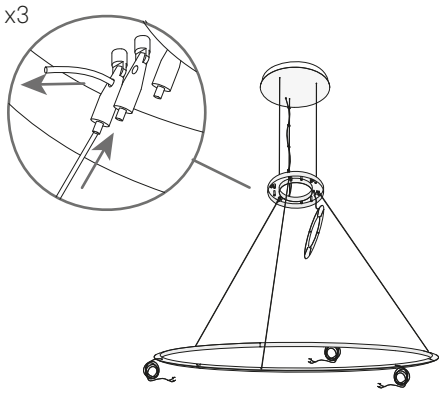

16

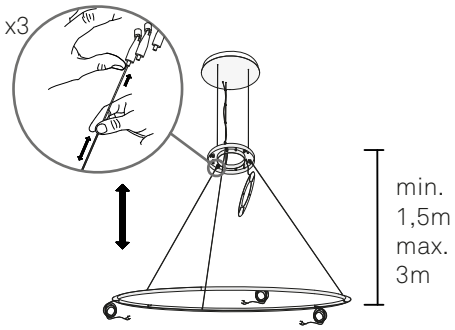

17

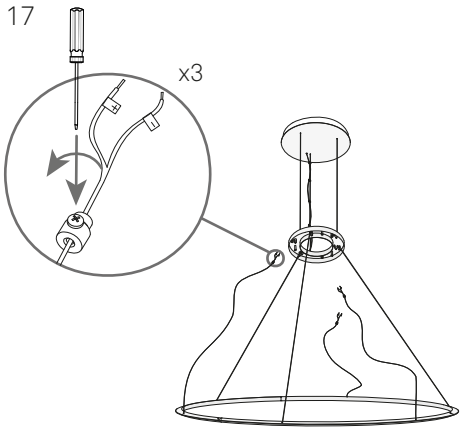

18

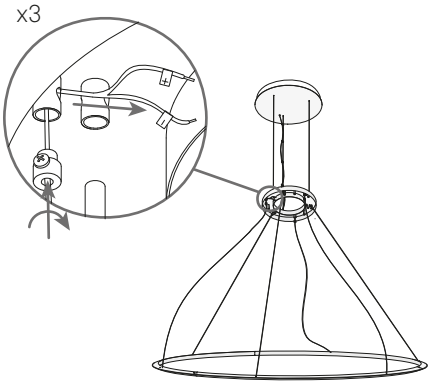

19

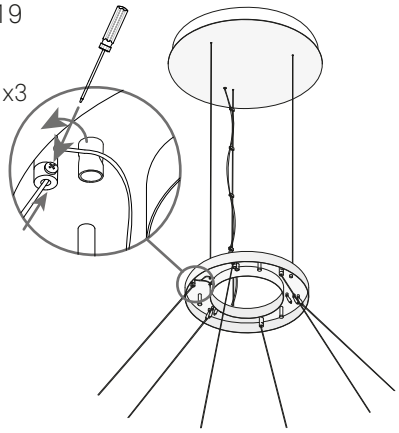

20

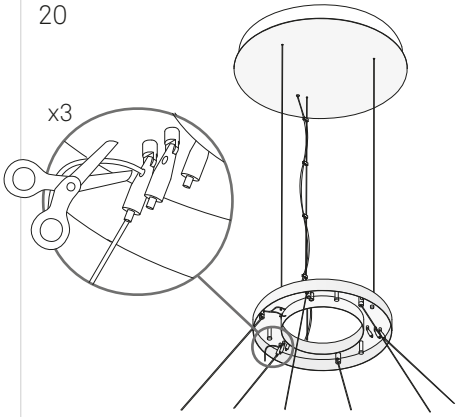

21

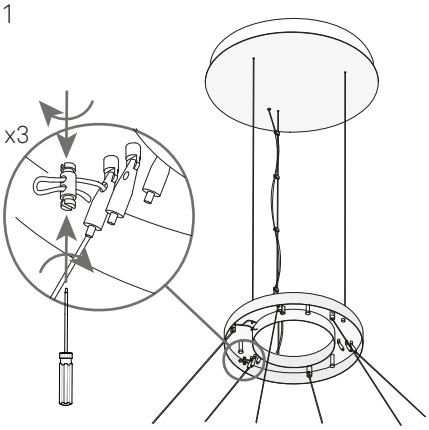

22

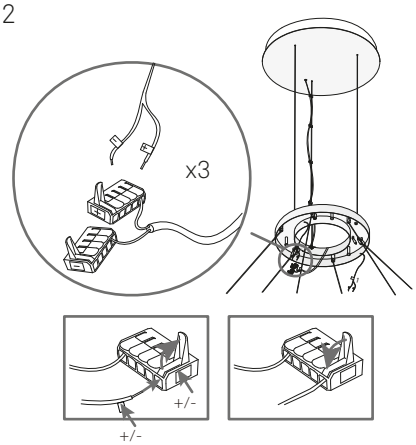

23

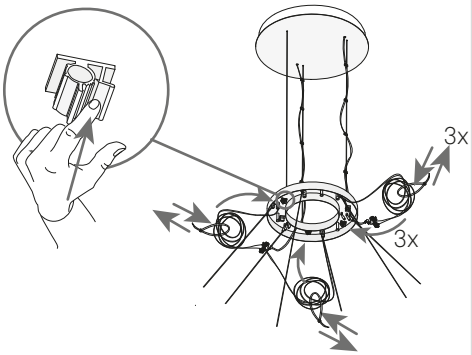

24

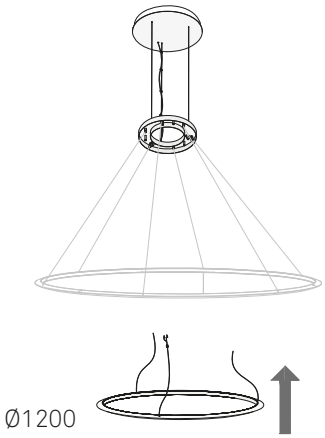

25

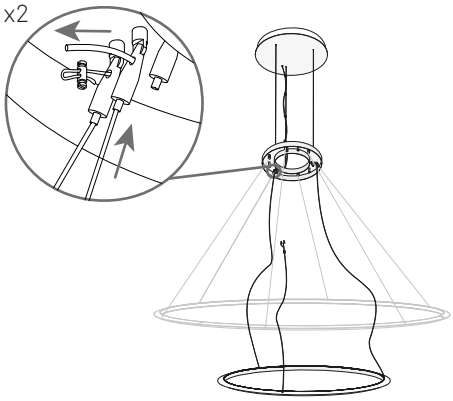

26

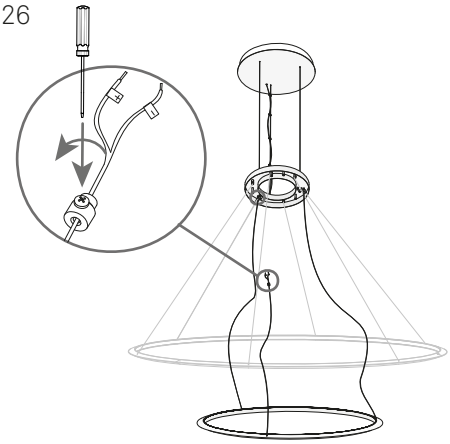

27

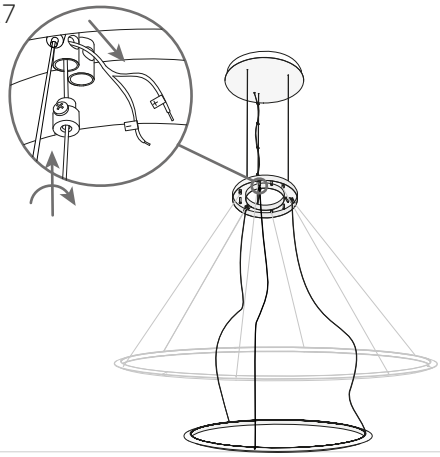

28

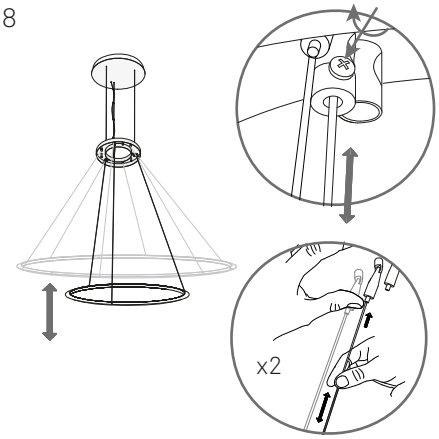

29

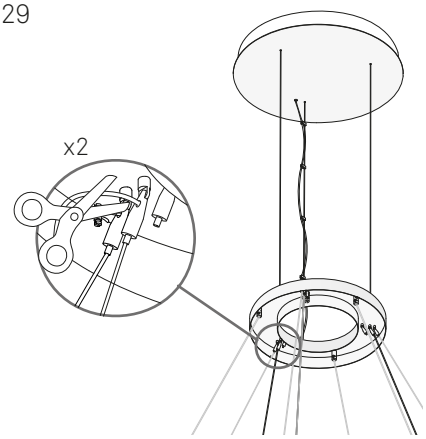

30

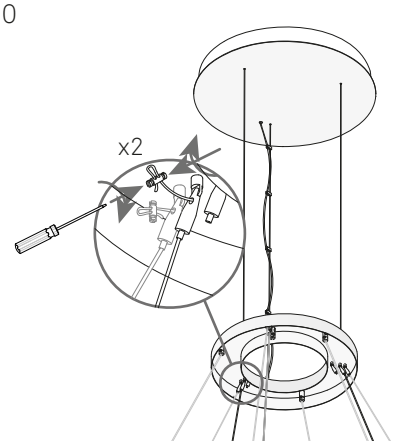

31

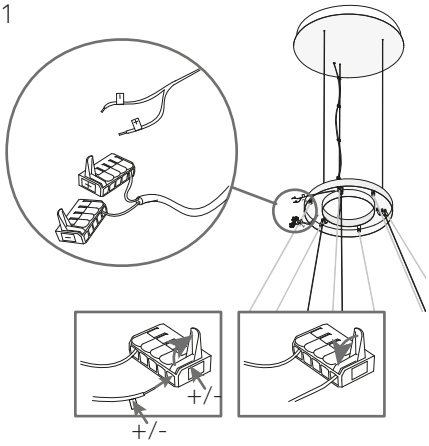

32

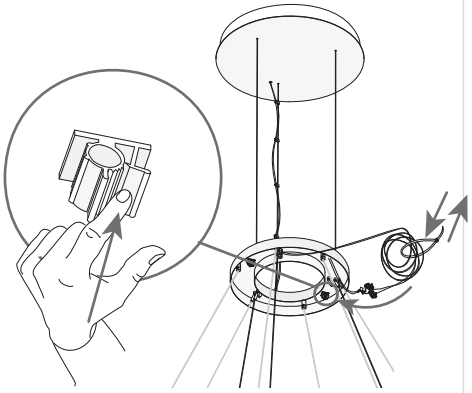

33

34

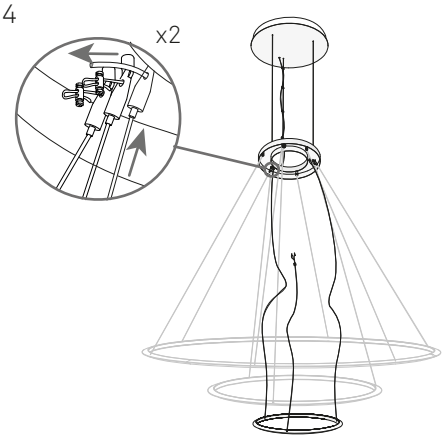

35

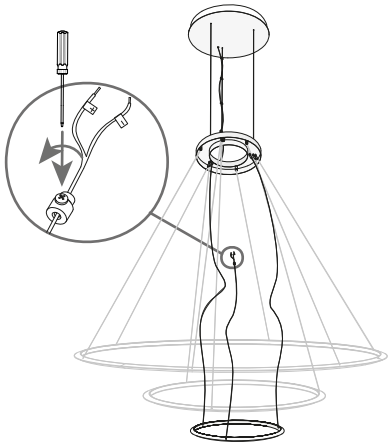

36

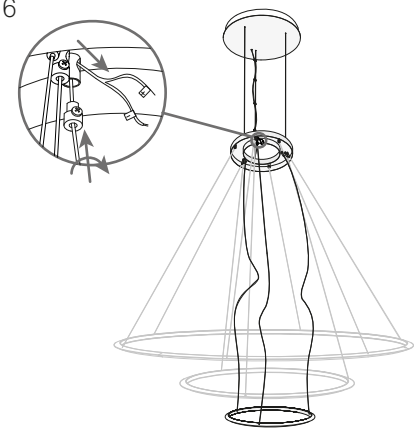

37

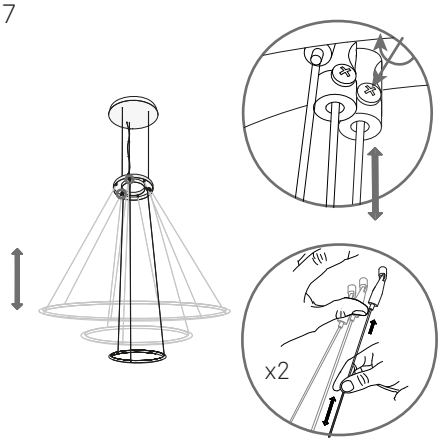

38

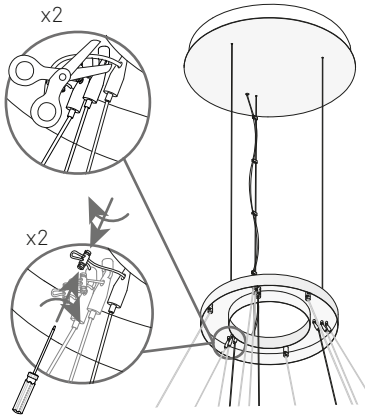

39

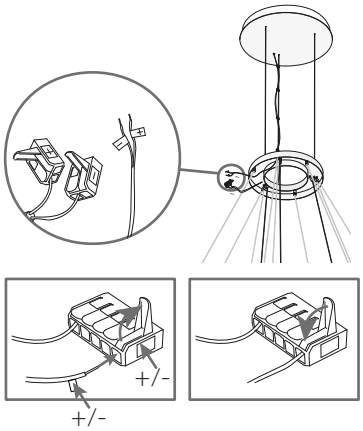

40

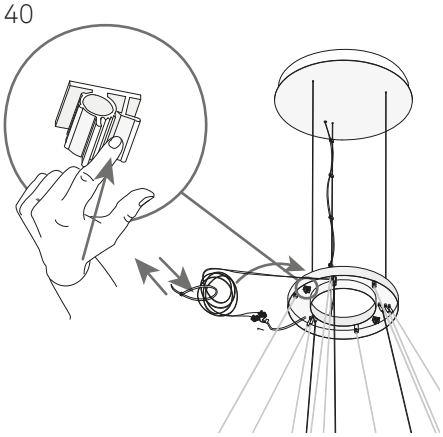

41

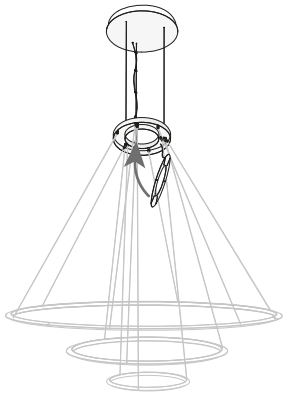

42

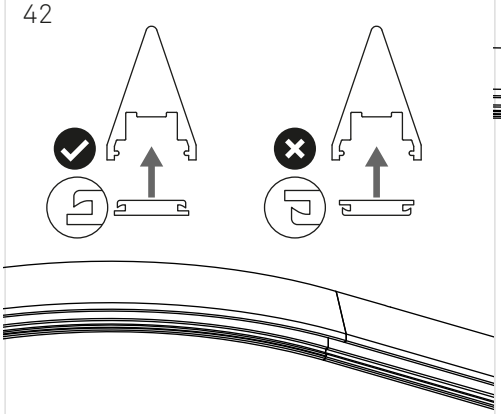

43

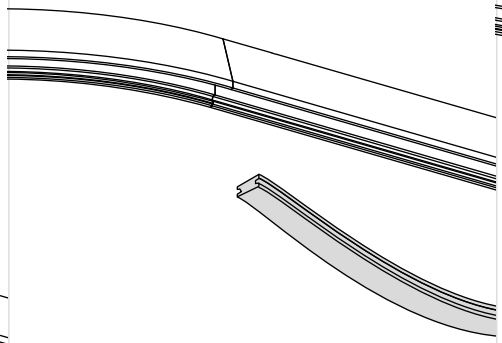

44

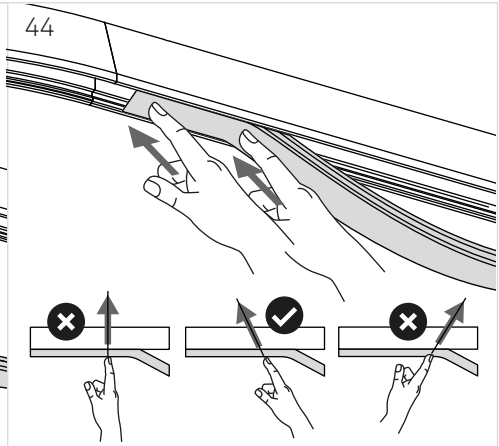

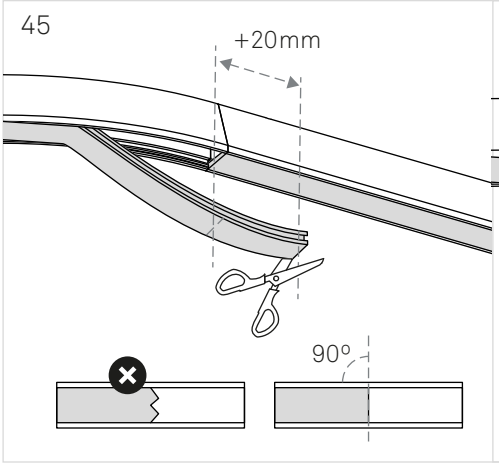
45
+20mm
90º

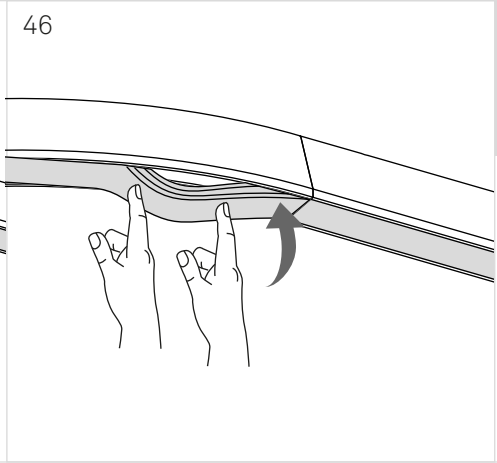
46

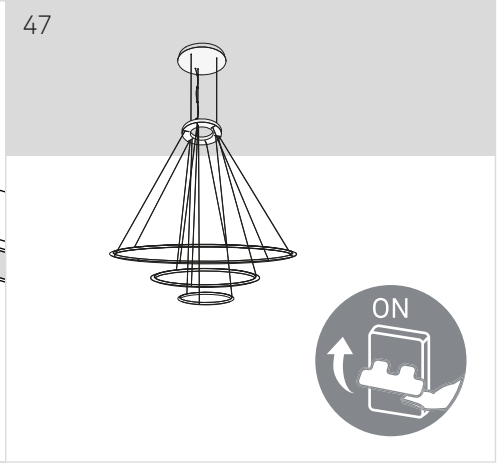
47
ON